Mechanical

SynJet Cooling Solution shown with HSLC-CALBL-003

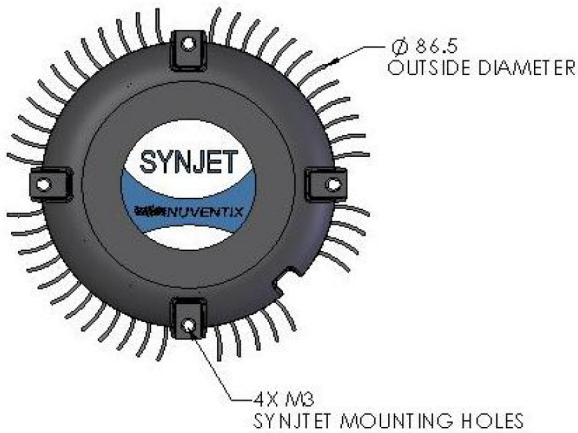

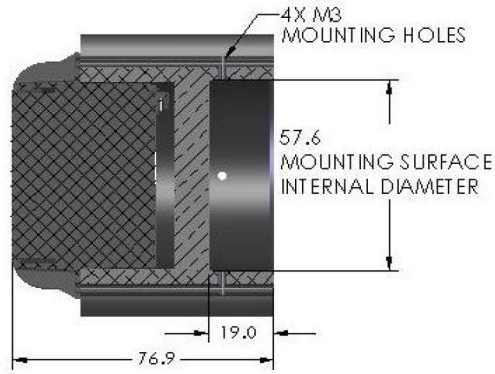

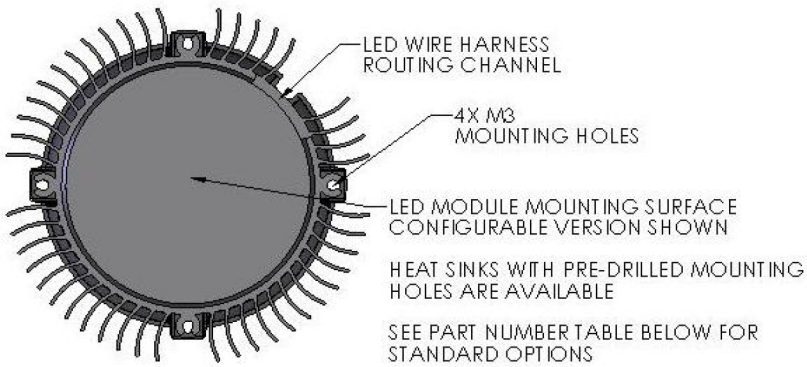

All dimensions are nominal and in mm unless otherwise stated. See product drawings for more detail.

SynJet Wire Harness

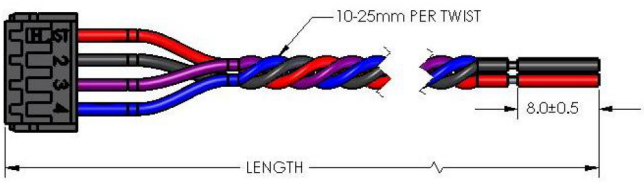

Connector Pinout

Pin	Wire Color	Symbol	Description
1	Red	+VDC	5 V or 12 V depending on model
2	Black	GND	Ground
3	Purple	CTRL2	Input for Level Select model Status signal for PWM model
4	Blue	CTRL1	Input for Level Select model PWM input for PWM model

IMPORTANT: SynJets should be completely wired to the power supply before the power supply is energized. The power supply should be turned off before the SynJet Cooler is disconnected. SynJet Coolers are not designed for “hot swap” or “hot plug” applications.

Part Numbers

Part Number	Description	Notes
SSLCS-CM005-001	SynJet, ZFlow 75, PWM, 5V, Black	Use PWM input to control performance setting
SSLCS-CM005-002	SynJet, ZFlow 75, Level Select, 5V, Black	Hard wired performance settings
SSLCS-CM012-001	SynJet, ZFlow 75, PWM, 12V, Black	Use PWM input to control performance setting
SSLCS-CM012-002	SynJet, ZFlow 75, Level Select, 12V, Black	Hard wired performance settings
HSLCS-CALBL-001	Heatsink, 34W, Spotlight Cooler, Philips SLM, Vossloh-Schwabe, Black	Has mounting holes for Philips SLM or Vossloh-Schwabe
HSLCS-CALBL-002	Heatsink, 34W, Spotlight Cooler, Osram PrevaLED, Black	Has mounting holes for Osram PrevaLED
HSLCS-CALBL-003	Heatsink, 34W, Spotlight Cooler, Configurable, Black	Mounting surface does not have mounting holes
HSLCS-CALBL-006	Heatsink, 34W, Spotlight Cooler, Xicato XSM, Black	Has mounting holes for Xicato XSM
HSLCS-CALBL-008	Heatsink, 34W, Spotlight Cooler, Bridgelux ES, Black	Has mounting holes for BridgeLux ES
HSLCS-CALBL-018	Heatsink, 34W, Spotlight Cooler, Zhaga B3, Tridonic, Black	Has mounting holes for Zhaga Spot Modules
WALLS-C4150-001	Wire Harness, 4-Wire, 150 mm Length	Contact sales for other lengths
WALLS-C4600-001	Wire Harness, 4-Wire, 600 mm Length	Contact sales for other lengths

Nuventix reserves the right to make changes to the products or information contained herein without notice. No liability is assumed as a result of their use or applications. For additional information, please contact Nuventix directly.

PRODUCT DATASHEET

Lampoo

SynJet® Spotlight Cooler 34W

SynJet cooling technology provides the most reliable thermal management solution available. This LED cooler has been developed by Nuventix for cooling tracklight, spotlight, and recessed downlight modules.

- Cools up to 34 W[4]
- Reliable 100K Hours Lifetime
- Energy Efficient
- 5 yr Warranty
- Small Form Factor
- Quiet Acoustics

Specifications[1]

Thermal & Acoustic

SynJet Setting[2]	Θs-a[3]	TDP[4] (W)	SPL (dBA)[5]	Wire Connections	
High Performance	0.88	34	28	Red to +VDC Black & Blue to Ground	+VDC GND
Mid Performance	0.93	32	25	Red to +VDC Black & Purple to Ground	+VDC GND
Standard Performance	1.0	30	22	Red to +VDC Black only to Ground	+VDC GND
PWM at 100% duty cycle	0.88	34	28	Red to +VDC Black only to Ground Blue to PWM Signal	+VDC GND PWM
Heatsink Only	3.00	10	N/A	N/A	N/A

Electrical

SynJet Setting[2]	Voltage (VDC) +/- 10%	Current (mA)[6]			Pavg (mW)	Voltage (VDC) +/- 10%	Current (mA)[6]			Pavg (mW)
		Imin	Iavg	Ipeak			Imin	Iavg	Ipeak	
High Performance	5	20	66	132	330	12	10	46	92	550
Mid			51	102	255			38	76	455
Standard			44	88	220			30	60	360
PWM at 100% duty cycle			66	132	330			46	92	550

Environmental

All Settings	Min	Max	Units	Conditions
Operating Temperature	-40	70	°C	Air temperature surrounding cooler
Storage Temperature	-50	95	°C	Air temperature surrounding cooler
Storage Altitude		15K	m	Above sea level
Operating Relative Humidity	5	95	%	Non-condensing
Weight		295	g	SynJet with heat sink
Reliability		100K	hrs	L10 @ 60°C
Regulatory Compliance				RoHS, UL, FCC Part 15 Class B, CE

[1] All values are typical at 25ºC unless otherwise stated.
[2] The Level Select model should be used for discrete performance settings. Follow the instructions in the Product Design Guide for adjusting settings.
[3] Thermal resistance values are given as reference only and are measured in free air without airflow obstructions. Thermal resistance is measured from the bottom middle of the heat sink to ambient air measured at the inlet to the SynJet, with a heat source at least 19cm^2 using the 34W spot cooler reference heat sink. Actual thermal performance may vary by application and final product design should be tested to assure proper thermal performance.
[4] Thermal Design Power is based on a 30ºC temperature rise of heat sink mounting surface above ambient temperature around cooler.
[5] Sound Pressure Level is measured at 1 meter distance per ISO 7779.
[6] The SynJet has a time varying current. The current waveform is sinusoidal and the average current (Iavg) is used to calculate the average power consumption (Pavg) at nominal input voltage (VDC). See the Electrical section in the Product Design Guide for a detailed explanation.